Methods Of Taper Turning

In ordinary straight turning, the cutting tool moves along a line parallel to the axis of the work, causing the finished job to be the same diameter throughout. However, when cutting a taper, the tool moves at an angle to the axis of the work, producing a taper. Therefore, to turn a taper, the work must either be mounted in a lathe so that the axis upon which it turns is at an angle to the axis of the lathe, or cause the cutting tool to move at an angle to the axis of the lathe.

When the diameter of a piece changes uniformly, from one end to the other, the piece is said to be tapered. Taper turning as a machining operation is the gradual reduction in diameter from one part of a cylindrical workpiece to another part

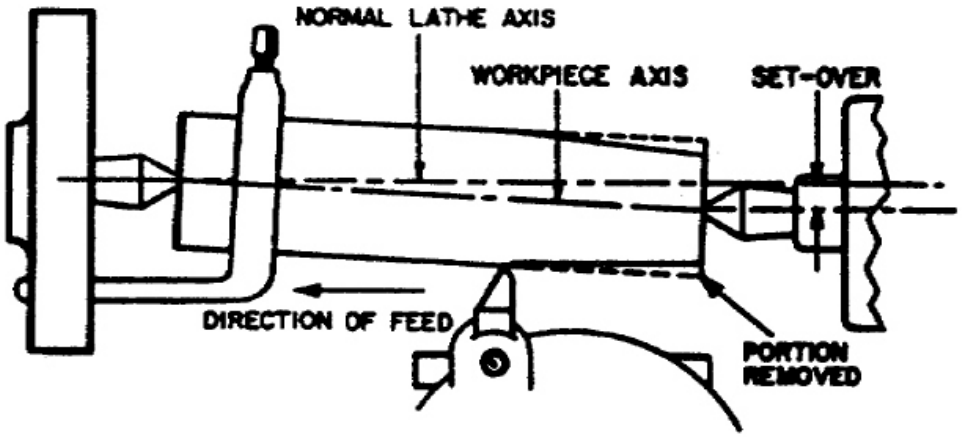

Tapers can be either external or internal. If a workpiece is tapered on the outside, it has an external taper; if it is tapered on the inside, it has an internal taper.

The method used for turning a taper depends on the degree, length, location of the taper (internal or external), and the number of pieces to be done. The three basic methods of turning a taper require the operator to use either a compound rest, offset the tailstock, or use the taper attachment. With any of these methods, the cutting tool must be set exactly on centre with the axis of the workpiece or the workpiece will not be truly conical, and the rate of taper will vary with each cut.

Taper Turning Attachment

The taper attachment is used for turning and boring tapers. It is bolted to the back of the carriage saddle. In operation, it is connected to the cross-slide so that it moves the cross-slide laterally as the carriage moves longitudinally. This action causes the cutting tool to move at an angle to the axis of the workpiece to produce a taper.

The angle of the desired taper is set on the guide bar of the attachment, and the guide bar support is clamped to the lathe bed. Since the cross-slide is connected to a shoe that slides on this guide bar, the tool follows along a line that is parallel to the guide bar and hence at an angle to the workpiece axis corresponding to the desired taper.

TAPER ATTACHMENT

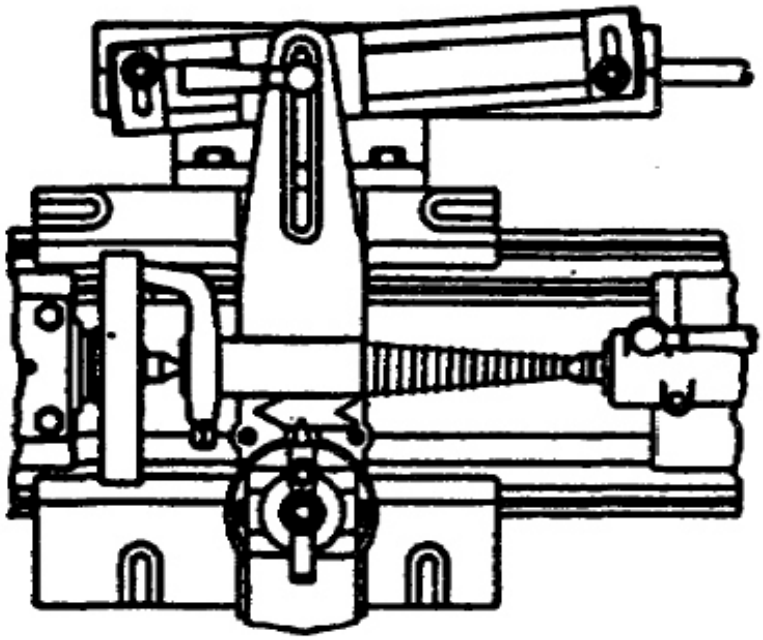

Compound Rest

The compound rest is generally used for turning or boring short steep tapers, but it can also be used for longer, gradual tapers, providing the length of the taper does not exceed the distance the compound rest will move upon its slide. This method can be used with a high degree of accuracy, but is somewhat limited due to the lack of an automatic feed and the length of the taper being restricted to the movement of the slide.

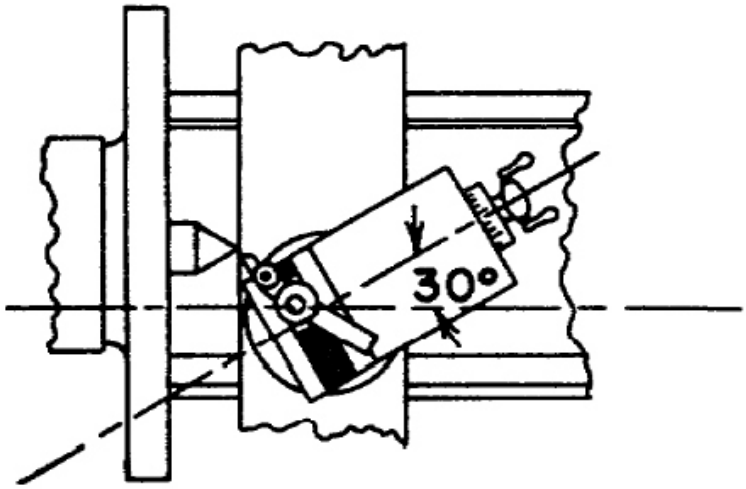

The compound rest base is graduated in degrees and can be set at the required angle for taper turning or boring.

With this method, it is necessary to know the included angle of the taper to be machined. An included angle is formed by and between two intersecting straight lines.)

The angle of the taper with the centerline is one-half the included angle and will be the angle that the compound rest is set for. For example: To true up a lathe center which has an included angle of 60˚, the compound rest would be set at 30˚ from parallel to the ways

If the taper is given in taper inches per foot, the angle for the compound rest setting will have to be computed or taken from an appropriate taper sizes and angles table.

OFF SETTING THE TAILSTOCK

The tailstock offset method is generally used to cut a taper when no taper attachment is available. This involves moving the tailstock centre out-of-line with the headstock centre. However, the amount that the tailstock may be offset is limited. This method will not permit steep tapers to be turned or standard tapers to be turned on the end of a long piece of work. Since the work will be essentially at an angle it will need to be machined between centres. Thus, a chuck or collet can not be used to hold the workpiece. Great care must be exercised in setting the tailstock back to centre when the taper turning operation is completed.